Compressed Air

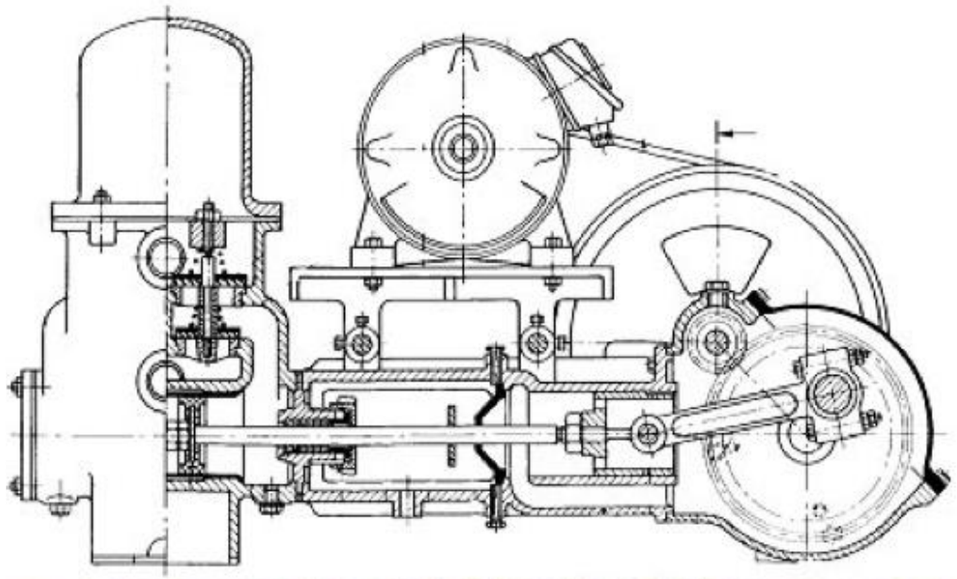

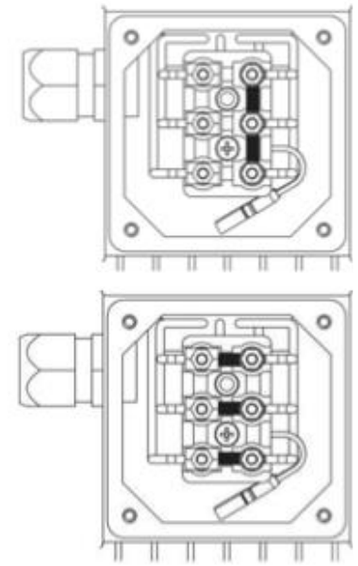

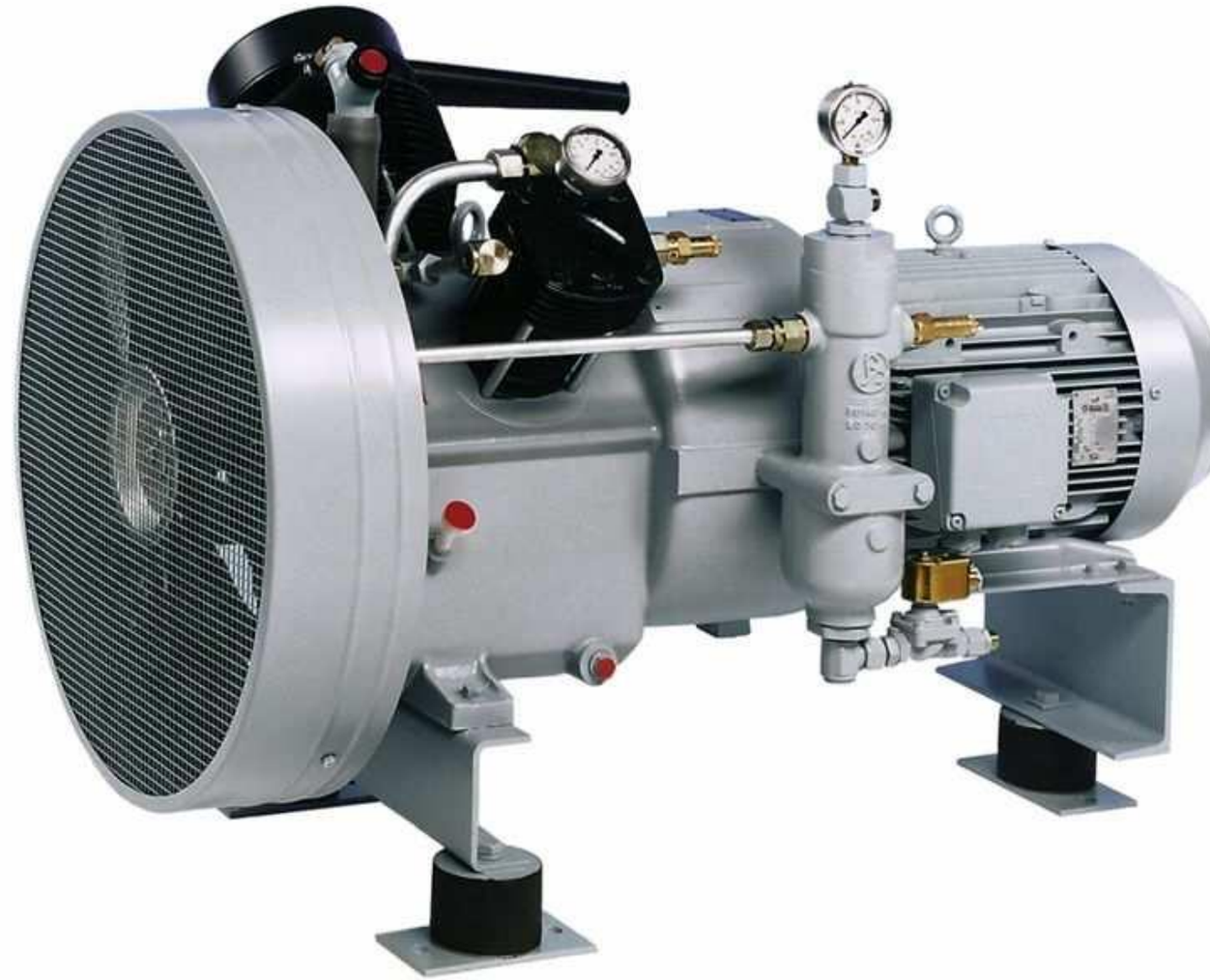

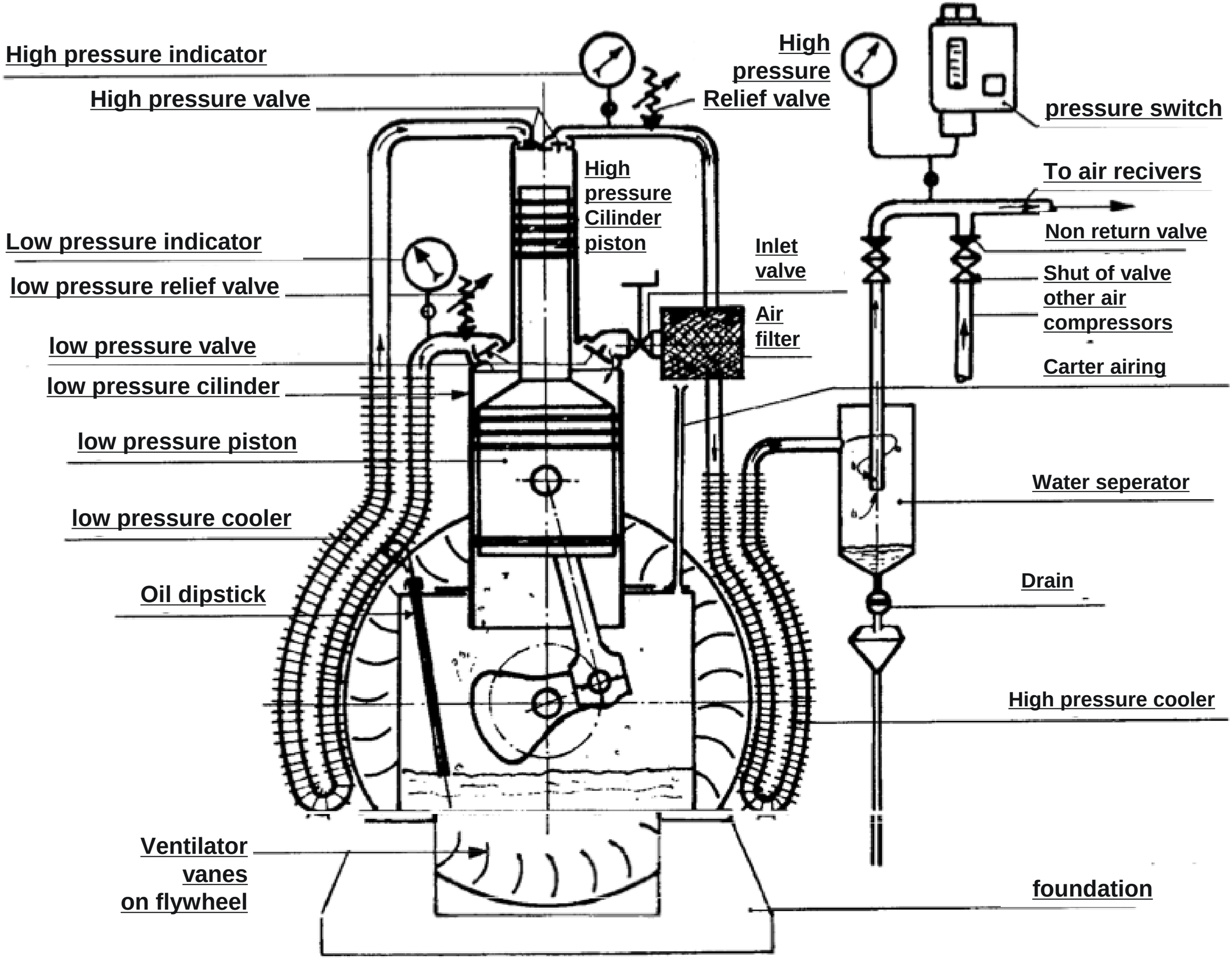
High pressure indicator
High pressure valve
High pressure Relief valve
pressure switch
High pressure Cilinder piston
To air recivers
Non return valve
Low pressure indicator
Inlet valve
low pressure relief valve
Shut of valve other air compressors
Air filter
low pressure valve
Carter airing
low pressure cilinder
low pressure piston
Water seperator
low pressure cooler
Drain
Oil dipstick
High pressure cooler
Ventilator vanes on flywheel
foundation

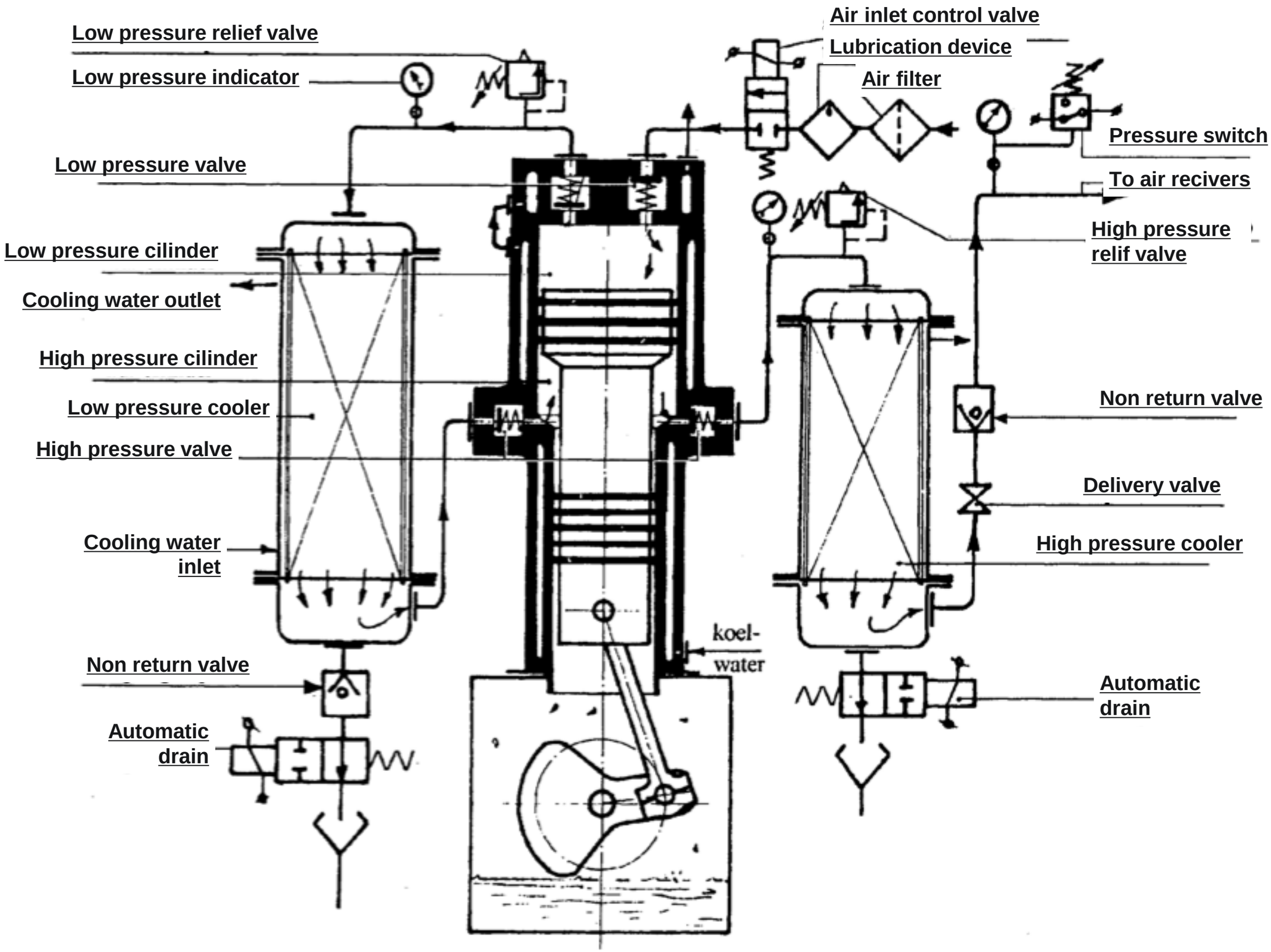
Low pressure relief valve
Low pressure indicator
Low pressure valve
Low pressure cilinder
Cooling water outlet
High pressure cilinder
Low pressure cooler
High pressure valve
Cooling water inlet
Non return valve
Automatic drain
Air inlet control valve
Lubrication device
Air filter
Pressure switch
To air recivers
High pressure relif valve
Non return valve
Delivery valve
High pressure cooler
Automatic drain
koel-
water

Compressor pressure volume ratio

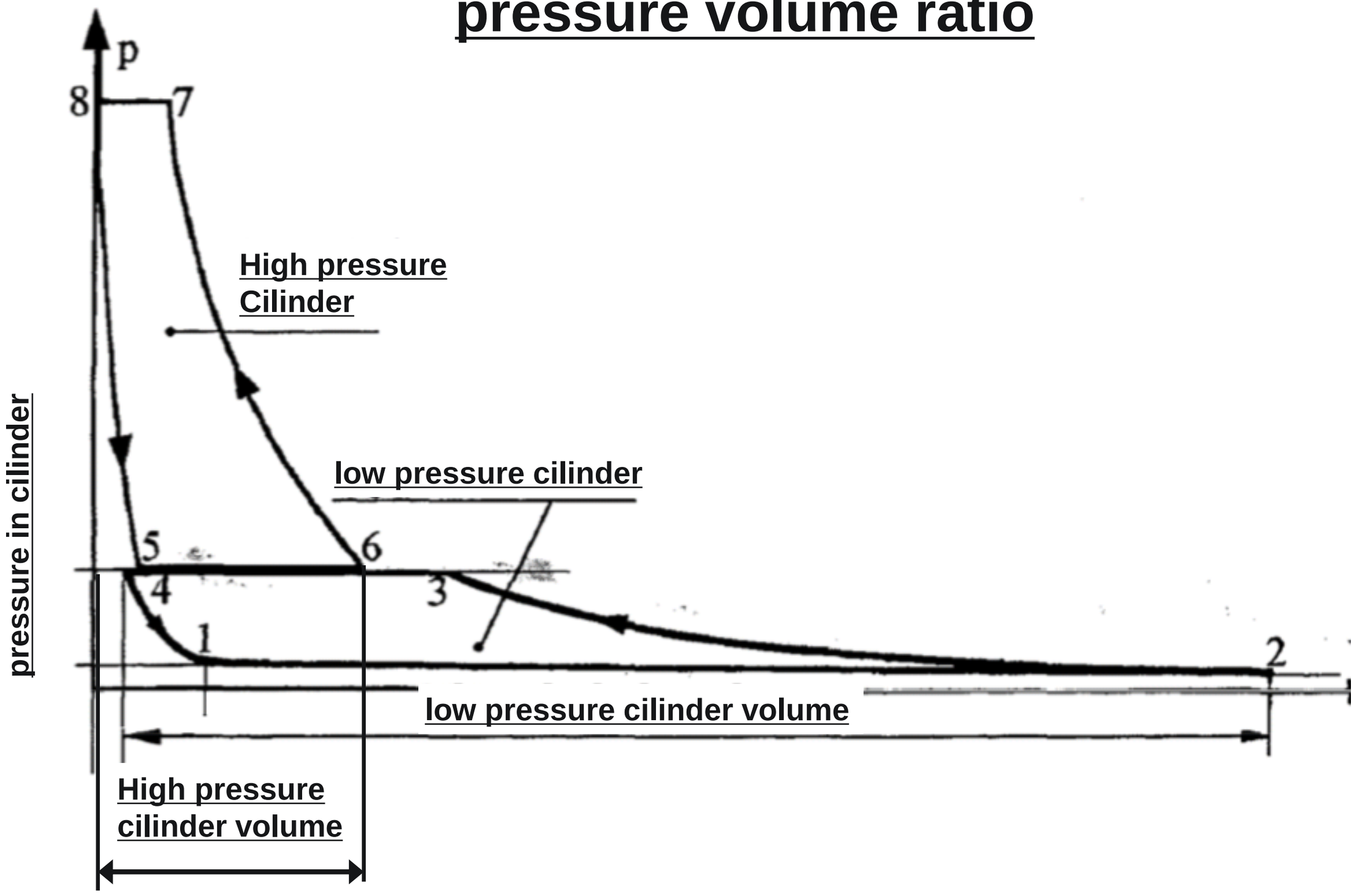

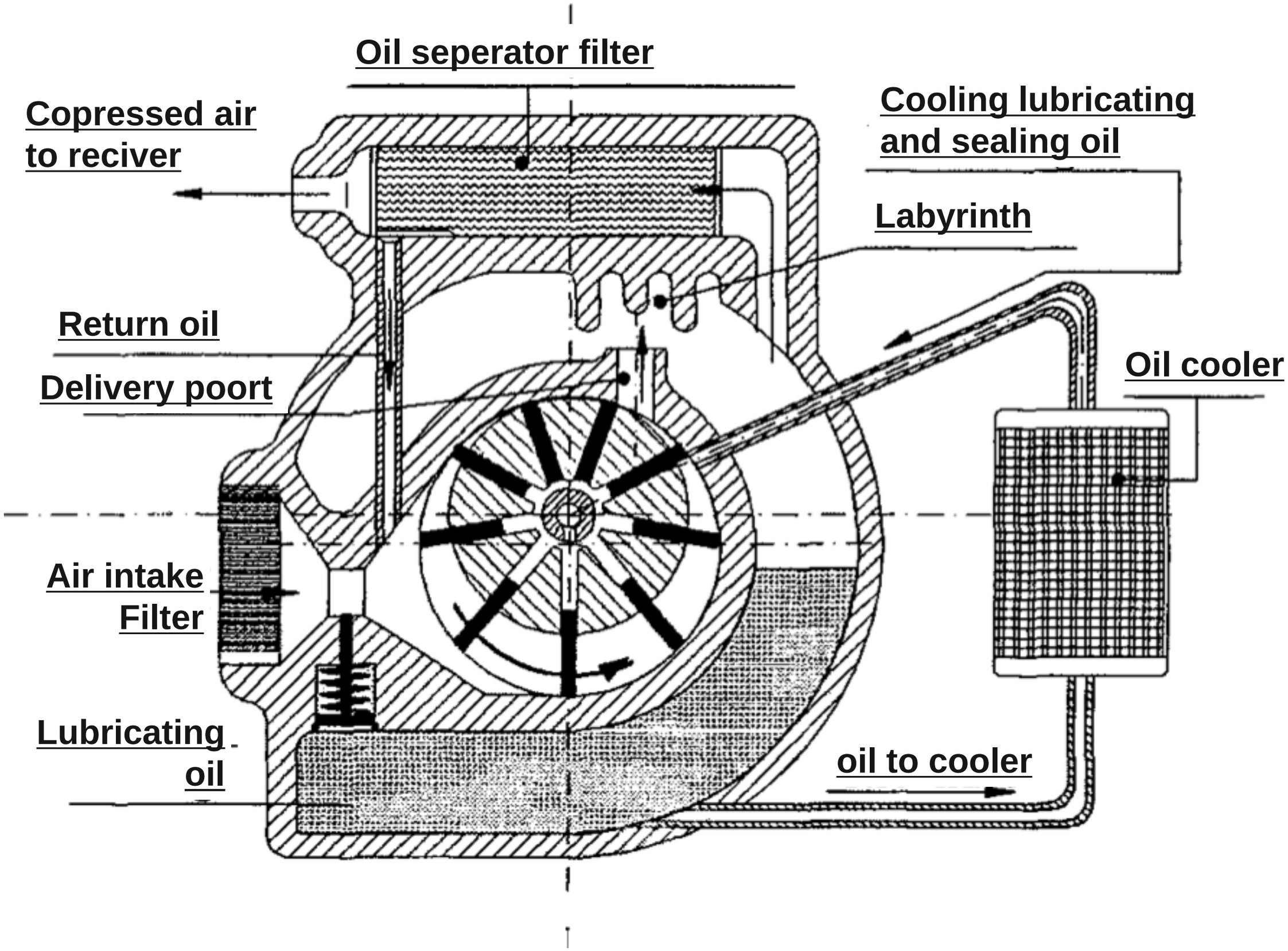
Oil seperator filter
Copressed air to reciver
Cooling lubricating and sealing oil
Labyrinth
Return oil
Delivery poort
Oil cooler
Air intake Filter
Lubricating oil
oil to cooler

Which system are we looking at?

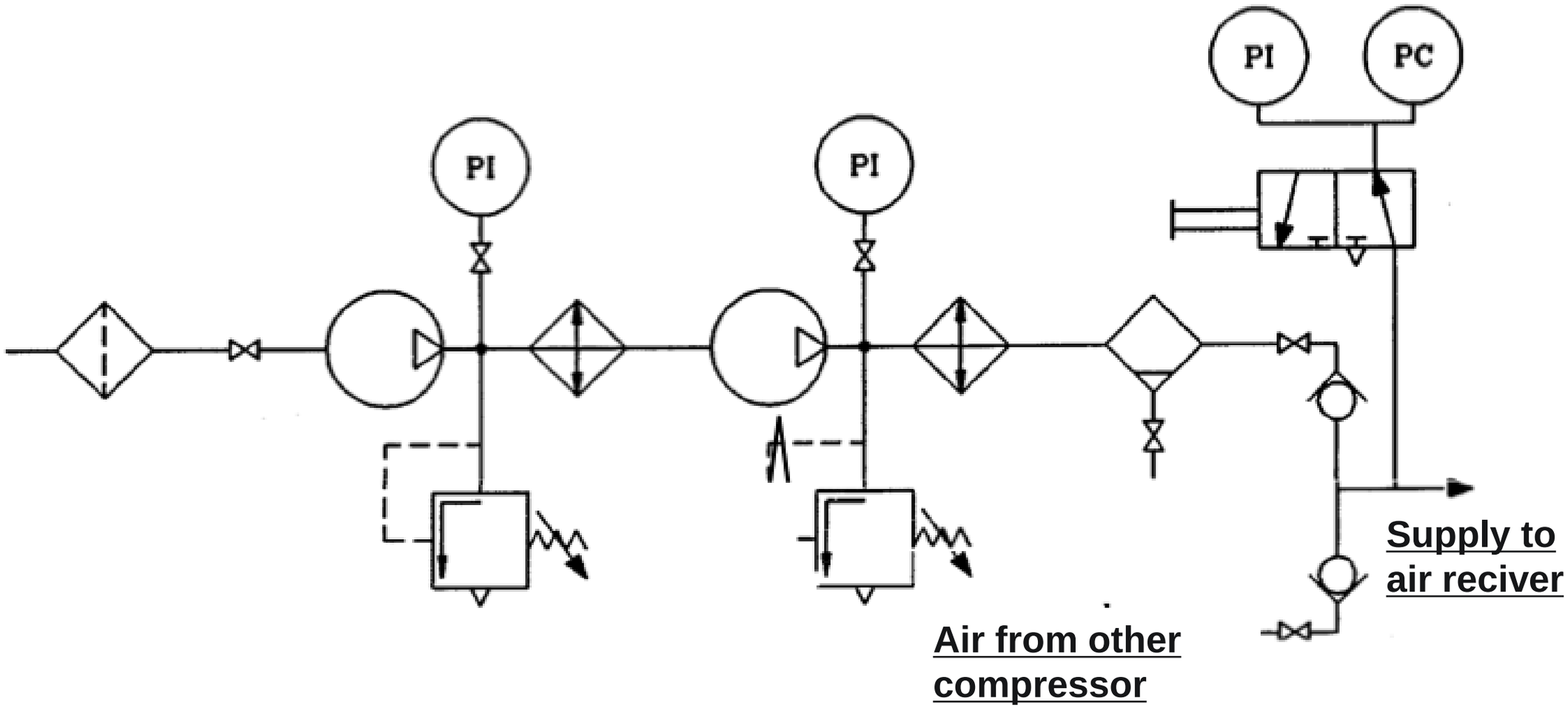

2 stage air compressor

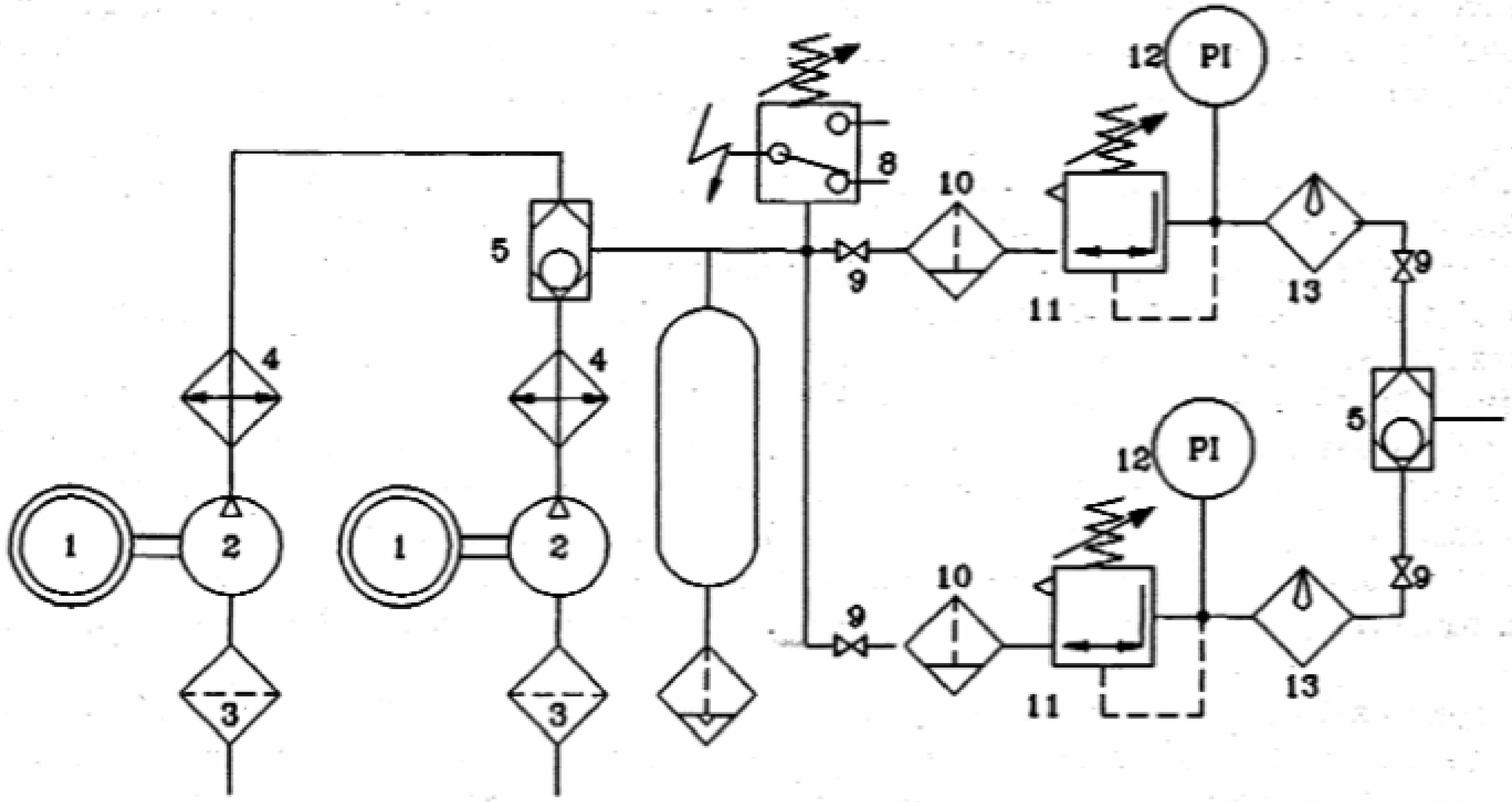

Control air system

Name the used symbols in the drawing

How does this system work?

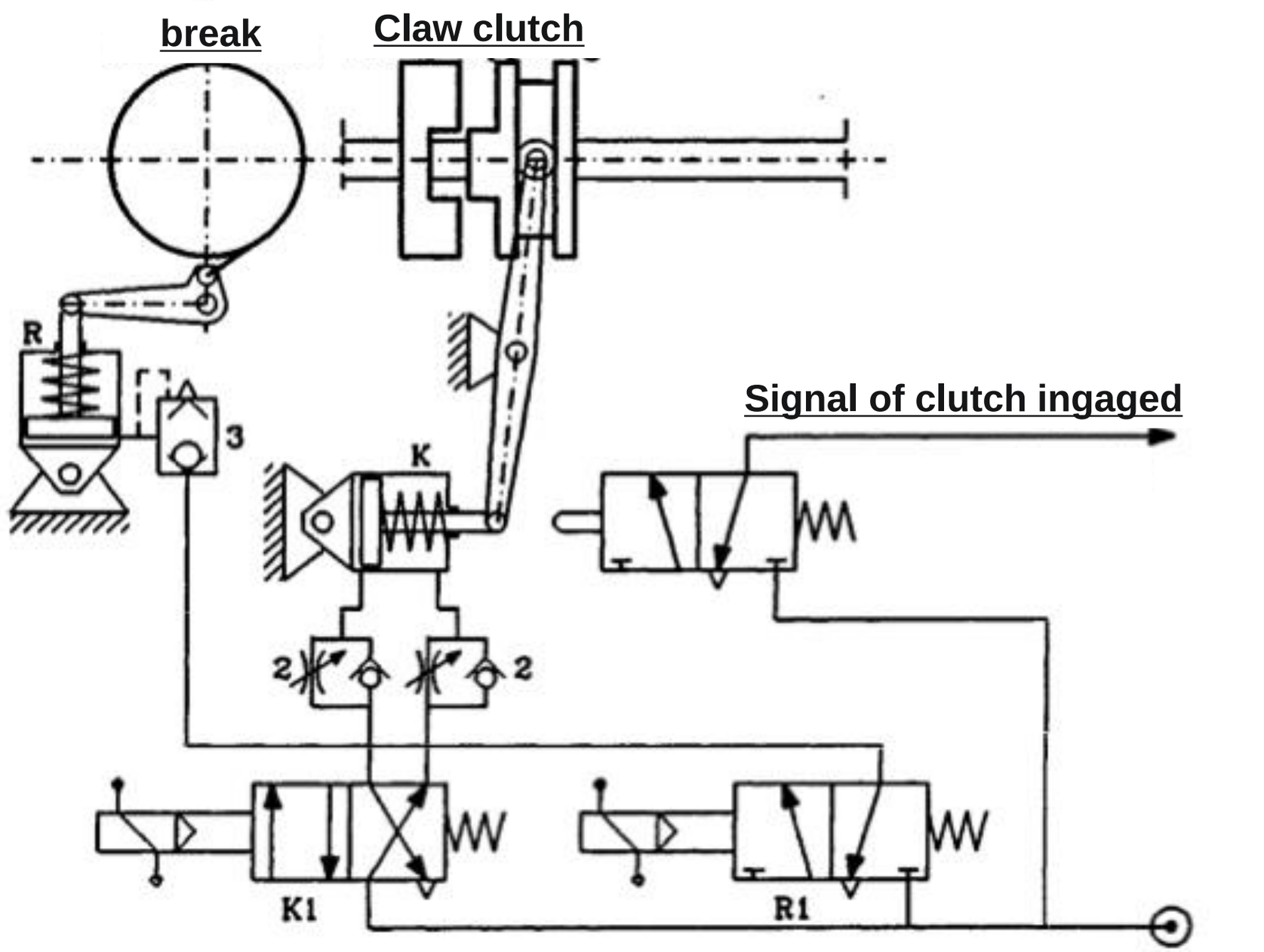

Electrical and pneumatic schematic of anchor winch control

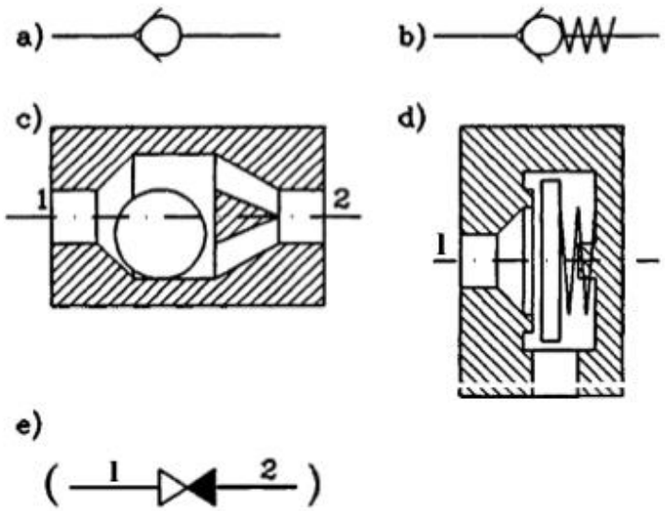

fig. 145 Non return valve

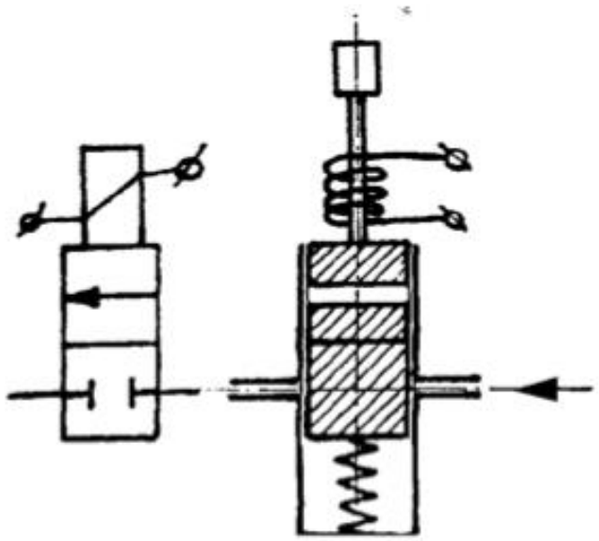

fig. 135 2/2 valve Electrical operated

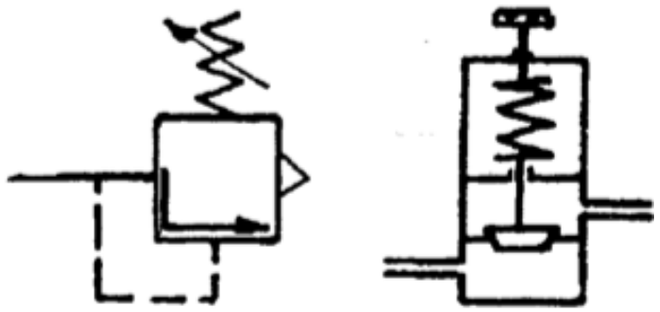

fig. 136 Safety valve adjustable

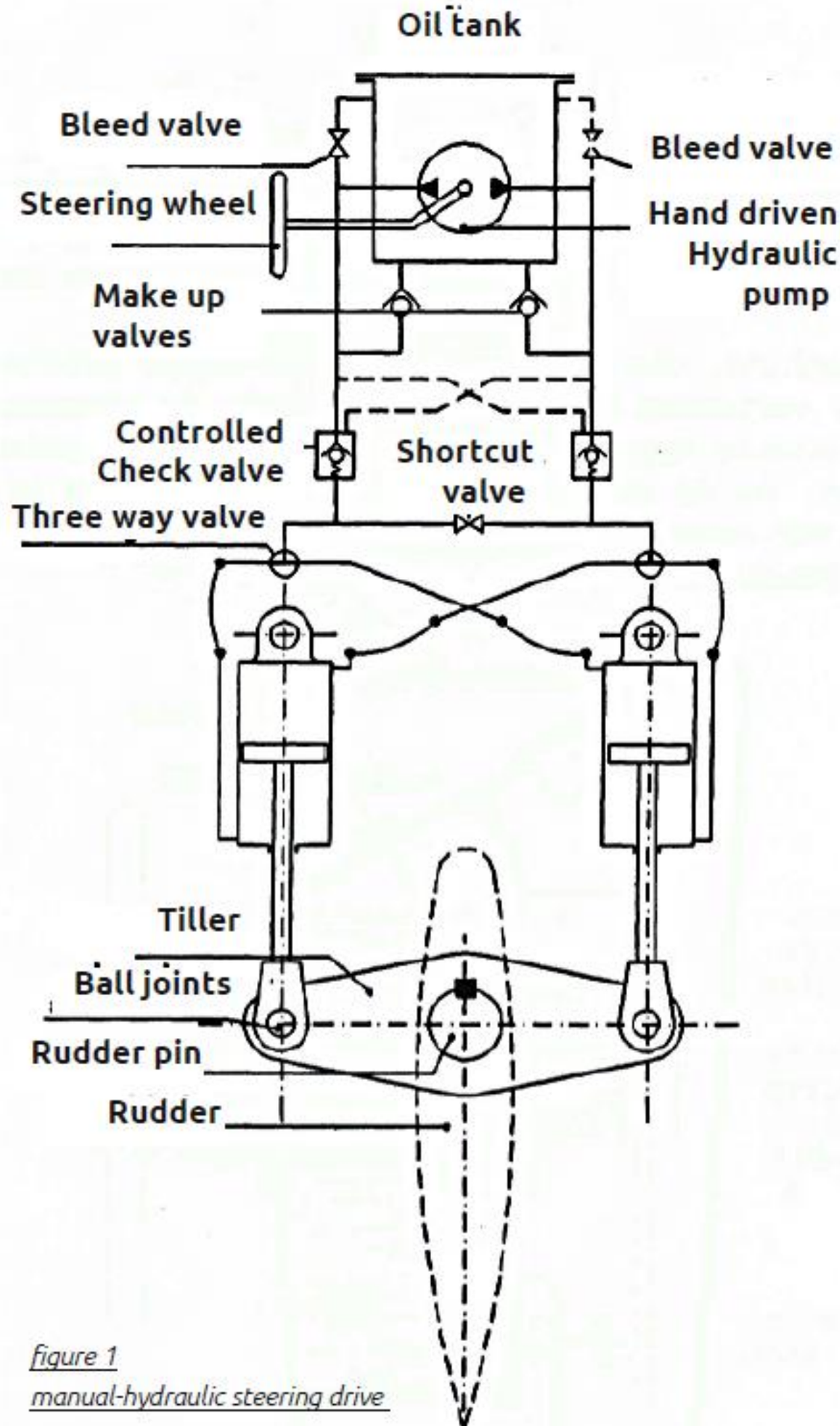

figure 1
manual-hydraulic steering drive

figure 3

Steering wheel drive with automatic manual emergency steering

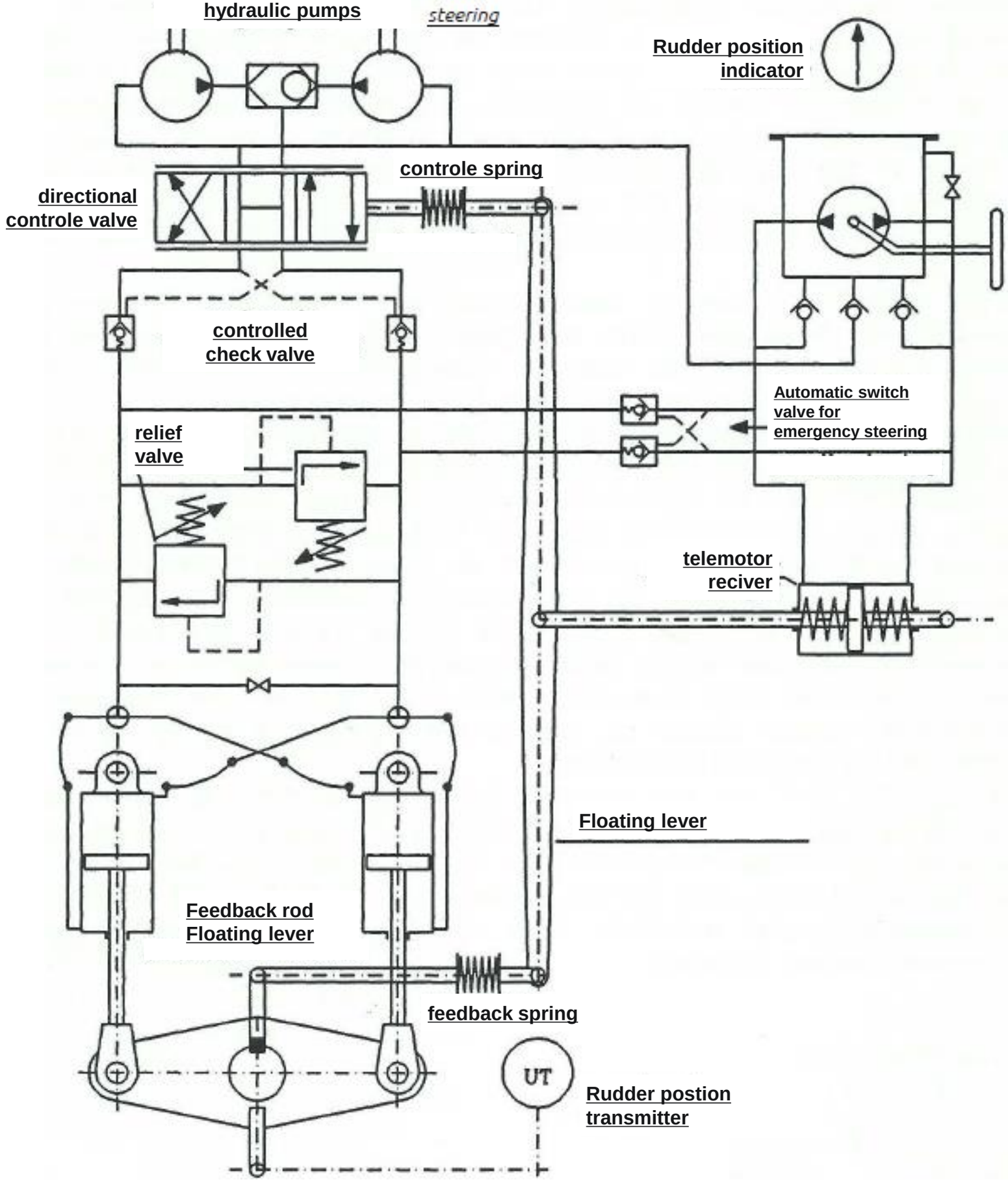

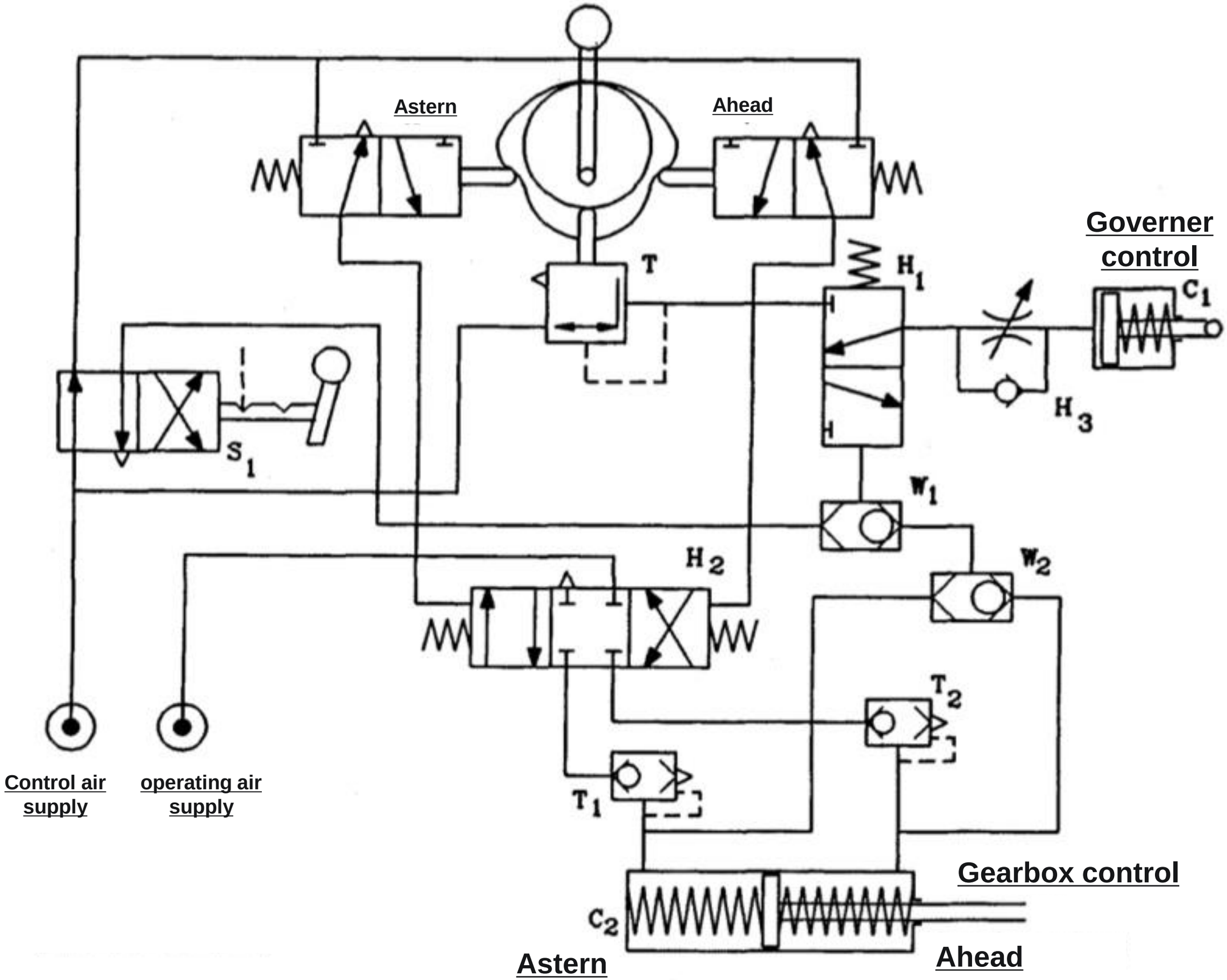
Astern
Ahead
Governer control
T
H1
C1
H3
S1
W1
W2
H2
T2
T1
Control air supply
operating air supply
Gearbox control
C2
Astern
Ahead

BONUS vraag

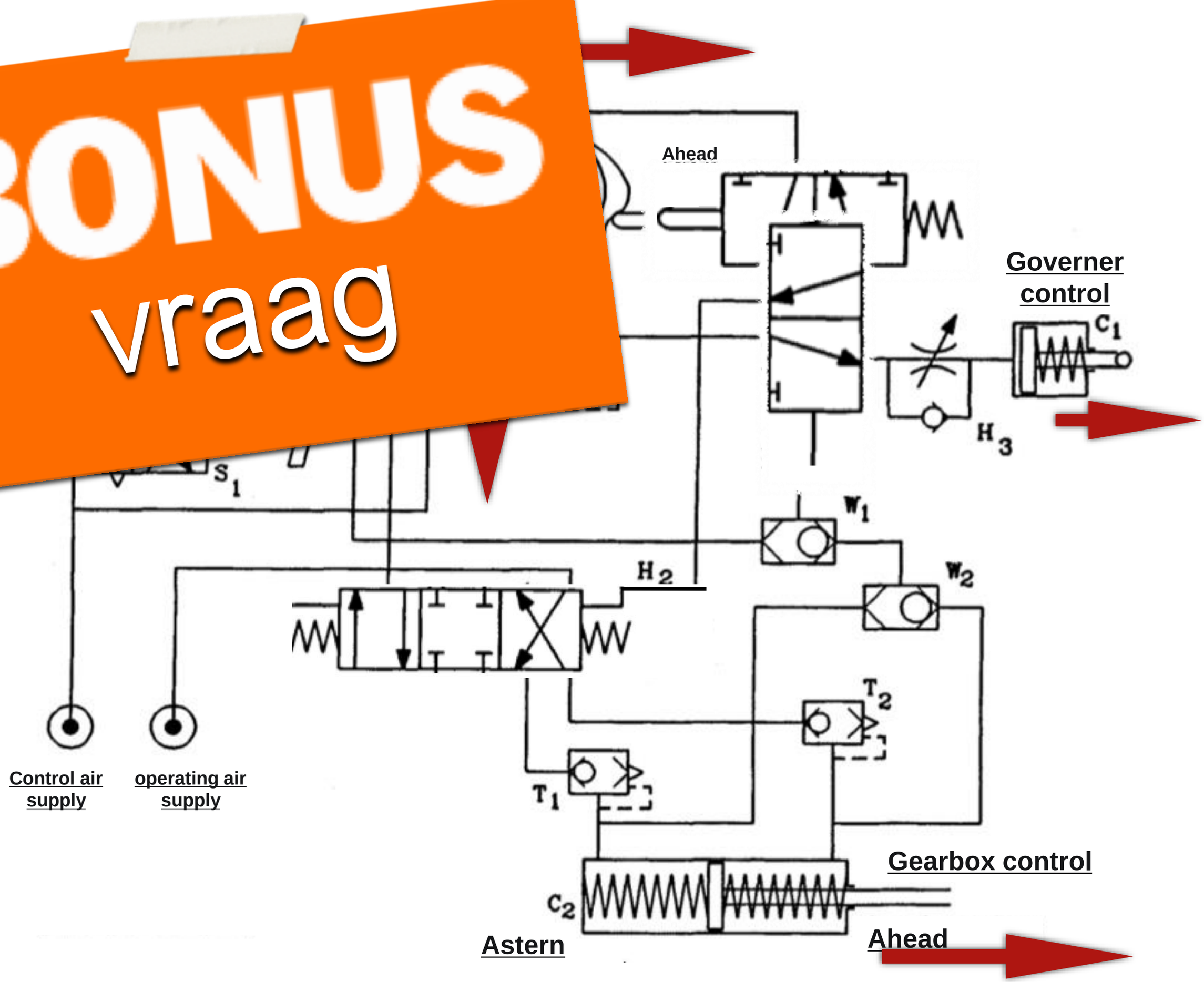
Ahead
Governer control
C_1
H_3
S_1
W_1
W_2
H_2
T_2
T_1
Control air supply
operating air supply
Gearbox control
C_2
Astern
Ahead

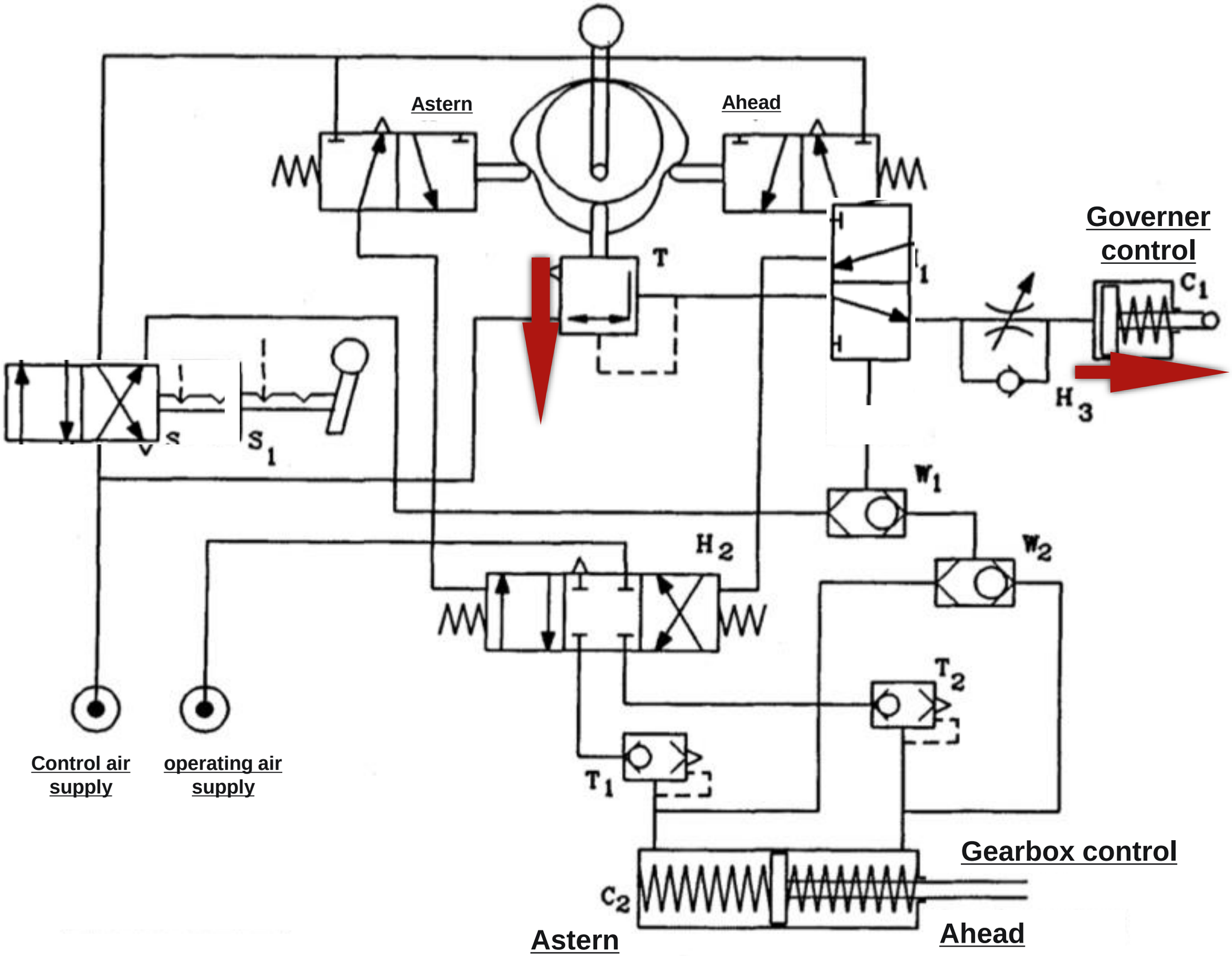
Astern
Ahead
Governer control
T
I_1
C_1
H_3
S
S_1
W_1
W_2
H_2
T_2
T_1
Control air supply
operating air supply
Gearbox control
C_2
Astern
Ahead

FOREWARD NO GEAR

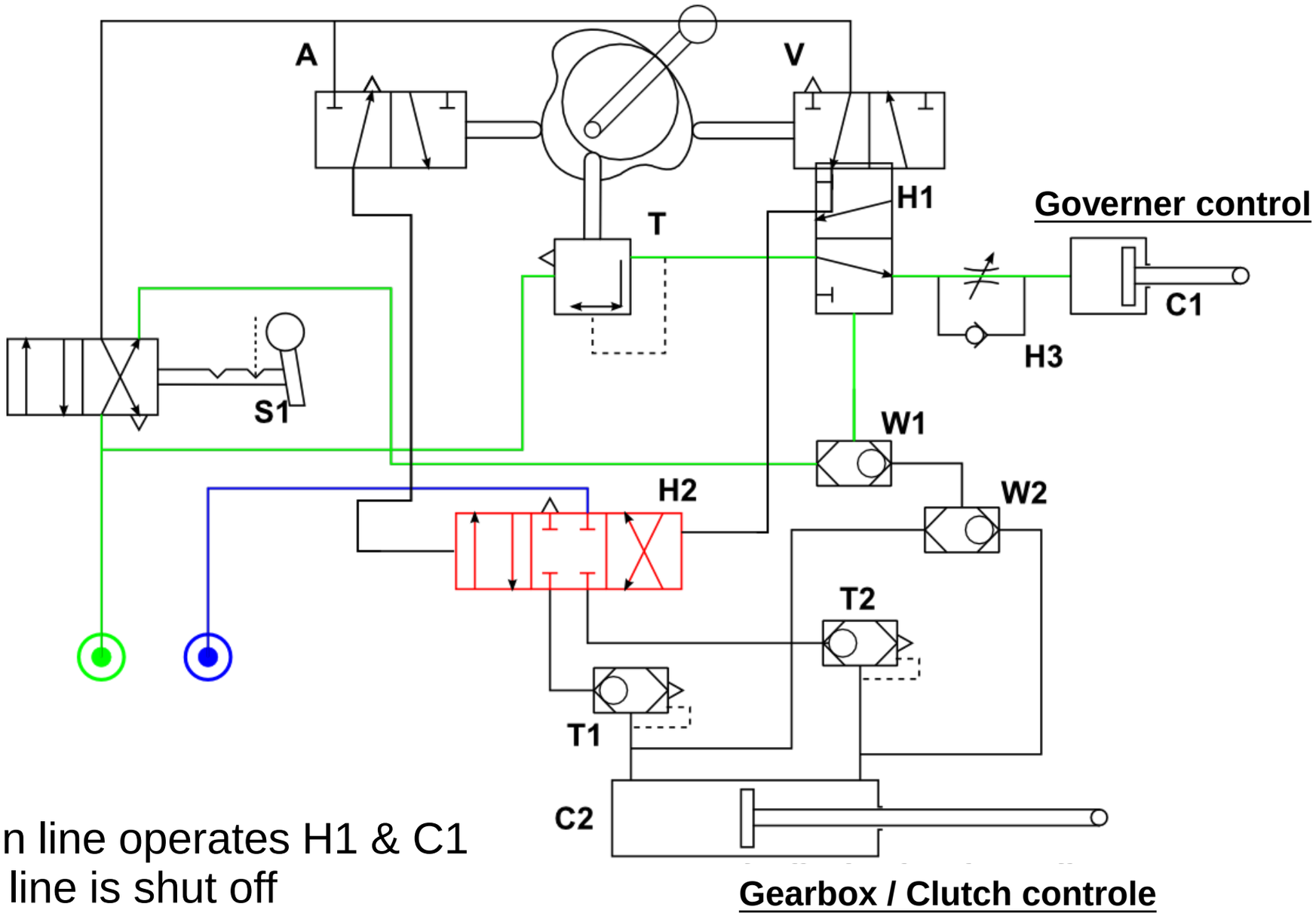

green line operates H1 & C1
blue line is shut off

BACKWARD NO GEAR

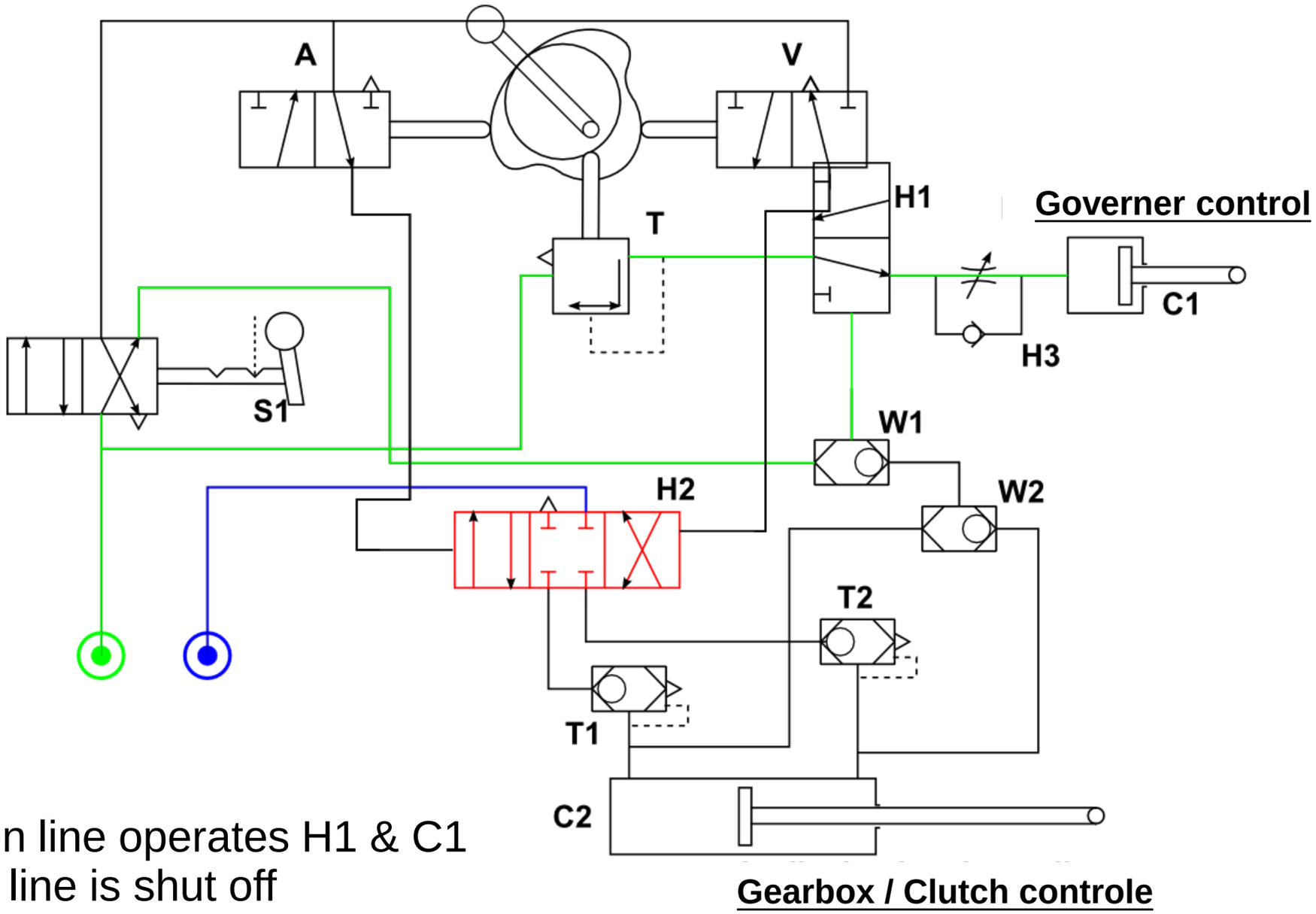

green line operates H1 & C1
blue line is shut off

FOREWARD IN GEAR

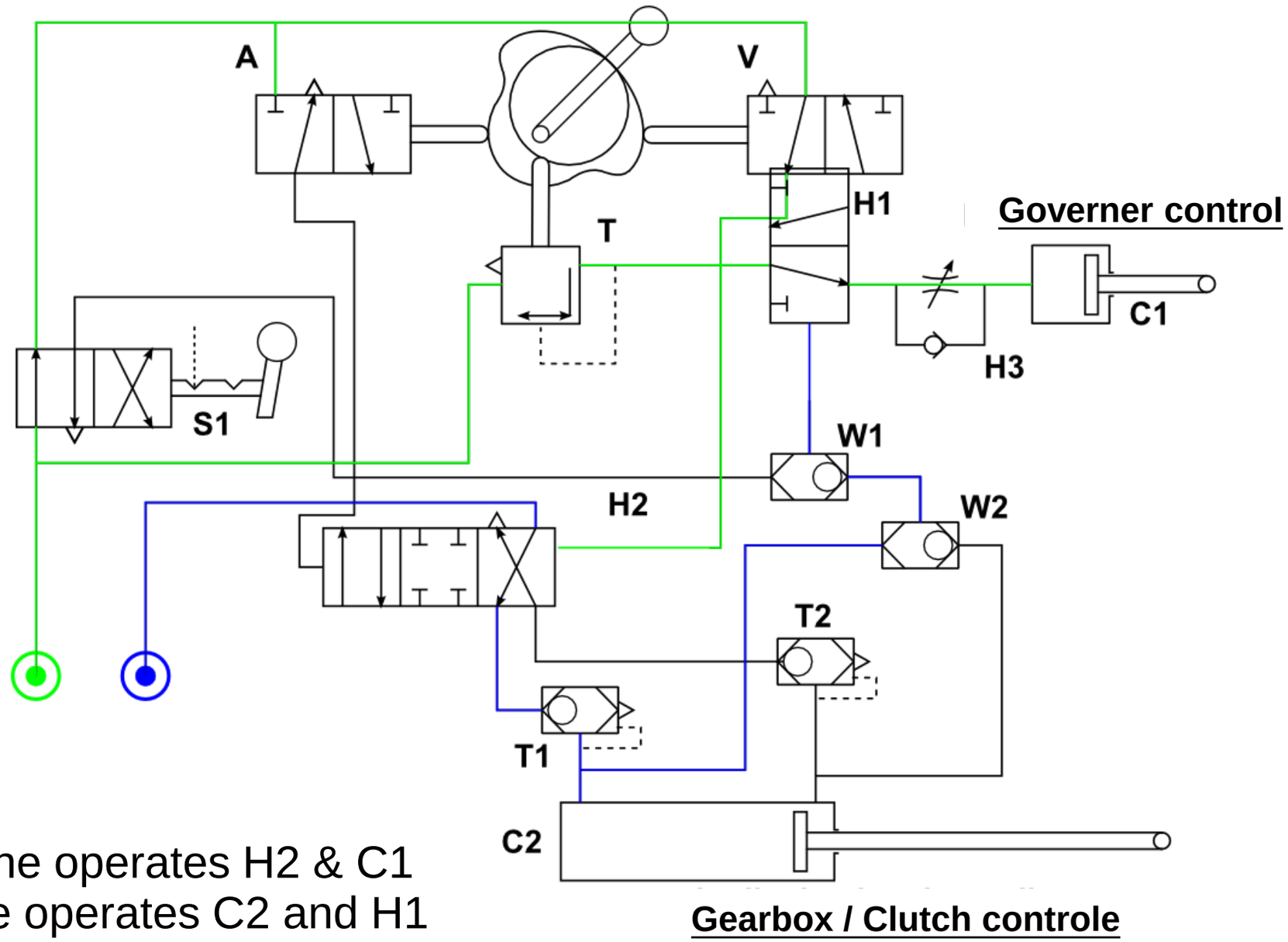

green line operates H2 & C1
blue line operates C2 and H1

BACKWARD IN GEAR

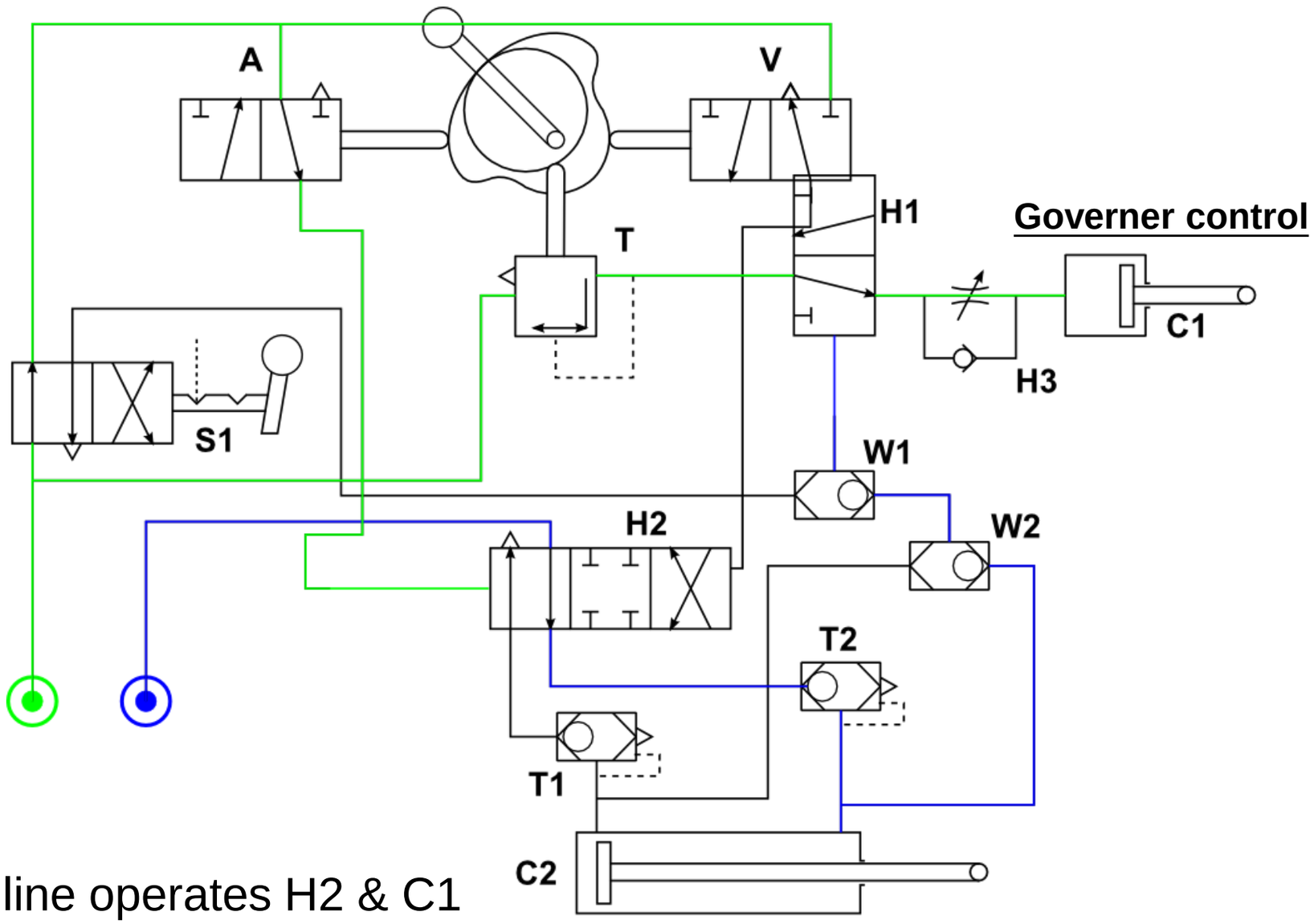

green line operates H2 & C1
blue line operates C2 and H1